LETTER	DESCRIPTION	REVISION	DATE	REV.NO
Ⓐ	Before 10 mm Now 12 mm.	Disc thickness is changed.	06.06.01	1
Ⓑ	Disc thickness changed. Before 12 Now 13 mm. Load capacity and disc, rim markings added.	Drawing is revised.	08.12.06	2

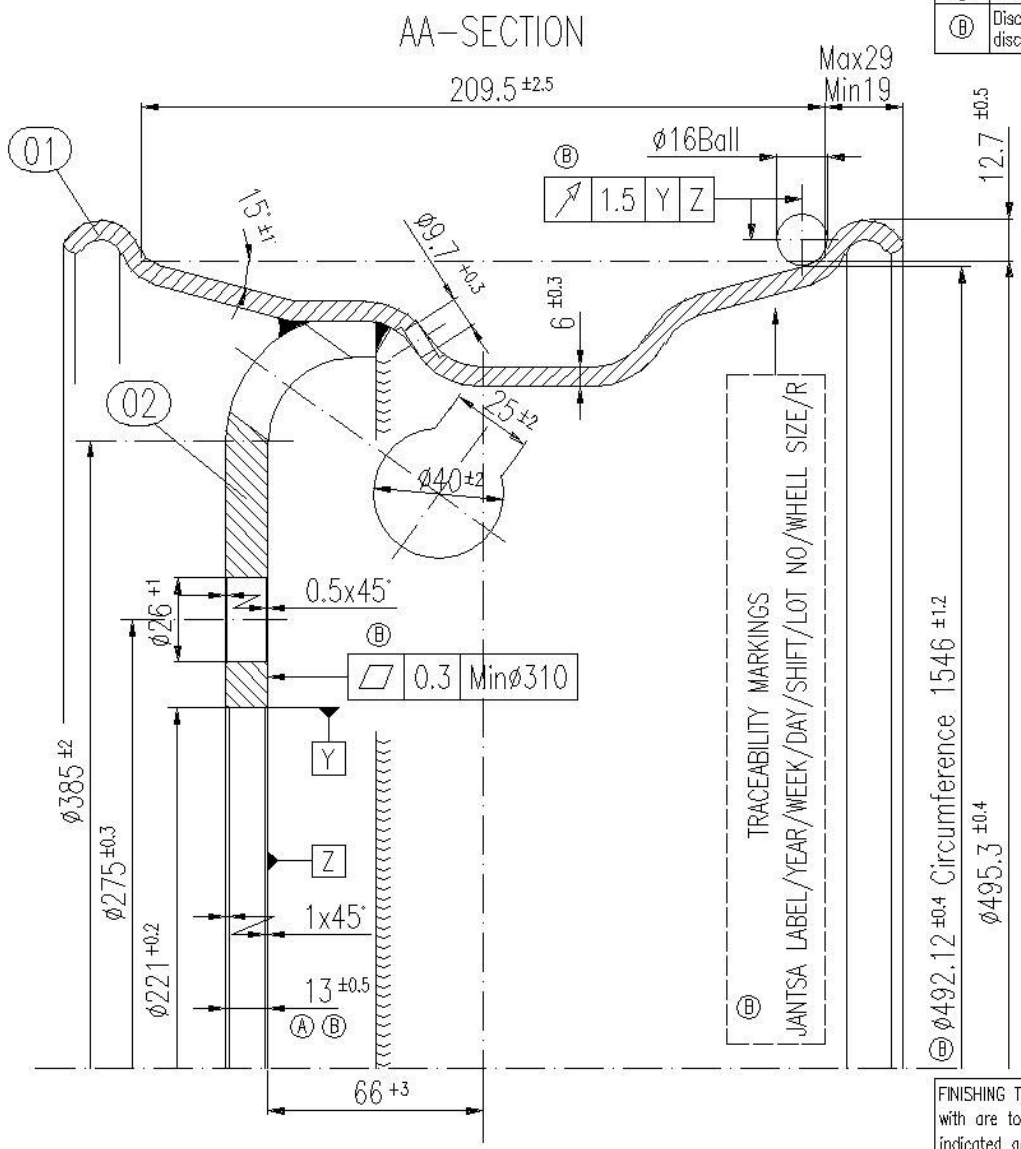

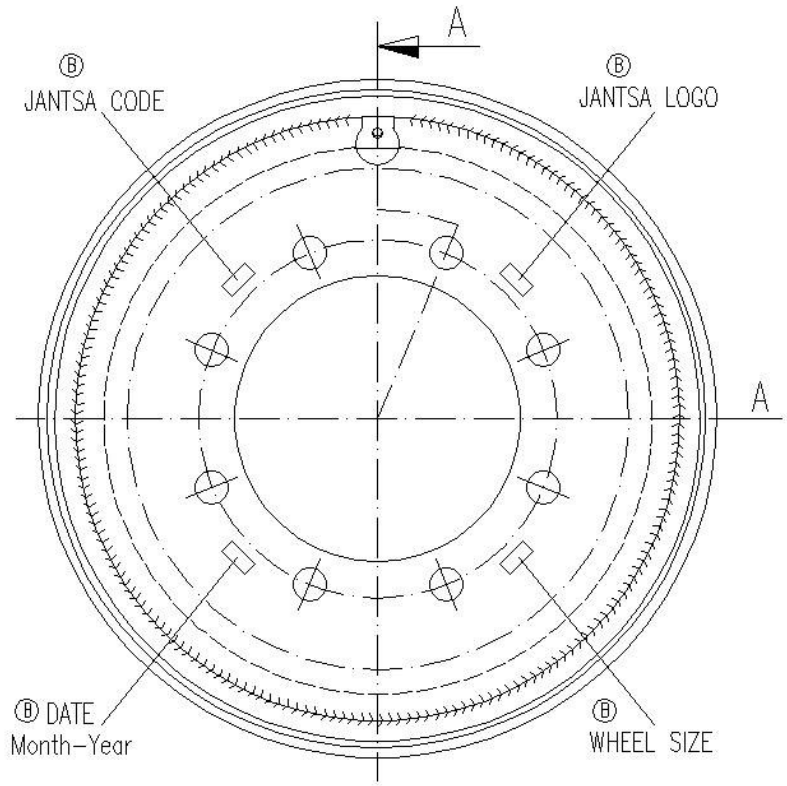

Ⓑ Load capacity 3350 Kg at 100 Km/h.

MON.NO	PCS	PART NAME	MATERIAL	CUTTING MEASUREMENT	WEIGHT
02	1	DISC	ERD 3944 / St 44–2	–	–
01	1	RIM	ERD 3944 / St 44–2	–	–

DISTRIBUTION	
Technical Management	1
Production Managment	1
Quality Assurance	1
INVESTMENT NO	
PAGE NO	

FINISHING TOLERANCES : All surfaces marked ▽ with are to be machined. Unless otherwise indicated general machining tolerances:

1) ANGULAR TOLERANCE = ±0° 10'

2) DIMENSIONAL TOLERANCE (mm)

	Up to 6	6 to 30	30 to 100	100 to 300
Diameter	±0.05	±0.1	±0.15	±0.2
Length	±0.1	±0.2	±0.3	±0.5

DO NOT ADJUST THE DIMESION FROM THE DRAWING

	NAME	SIGNATURE	DATE
DRAWN BY	M.KARADELI		06.06.01
CHECKED	M.KARADELI		06.06.01
APPROVED	S.BILGENOGLU		06.06.01

SCALE: –

Item Name: 19.5x8.25

jantsa
Wheel Industry & Trade Inc.Co.
Phone : 0 256 259 11 25
Fax : 0 256 259 11 24
AYDIN / TURKEY

DRAWING NO: 825142