LETTER	DESCRIPTION	REVISION	DATE	REV.NO
Ⓐ	Rim thickness before 6.5 now 6 mm. Rim material is changed.	Drawing is revised.	27.08.07	1

AA-SECTION

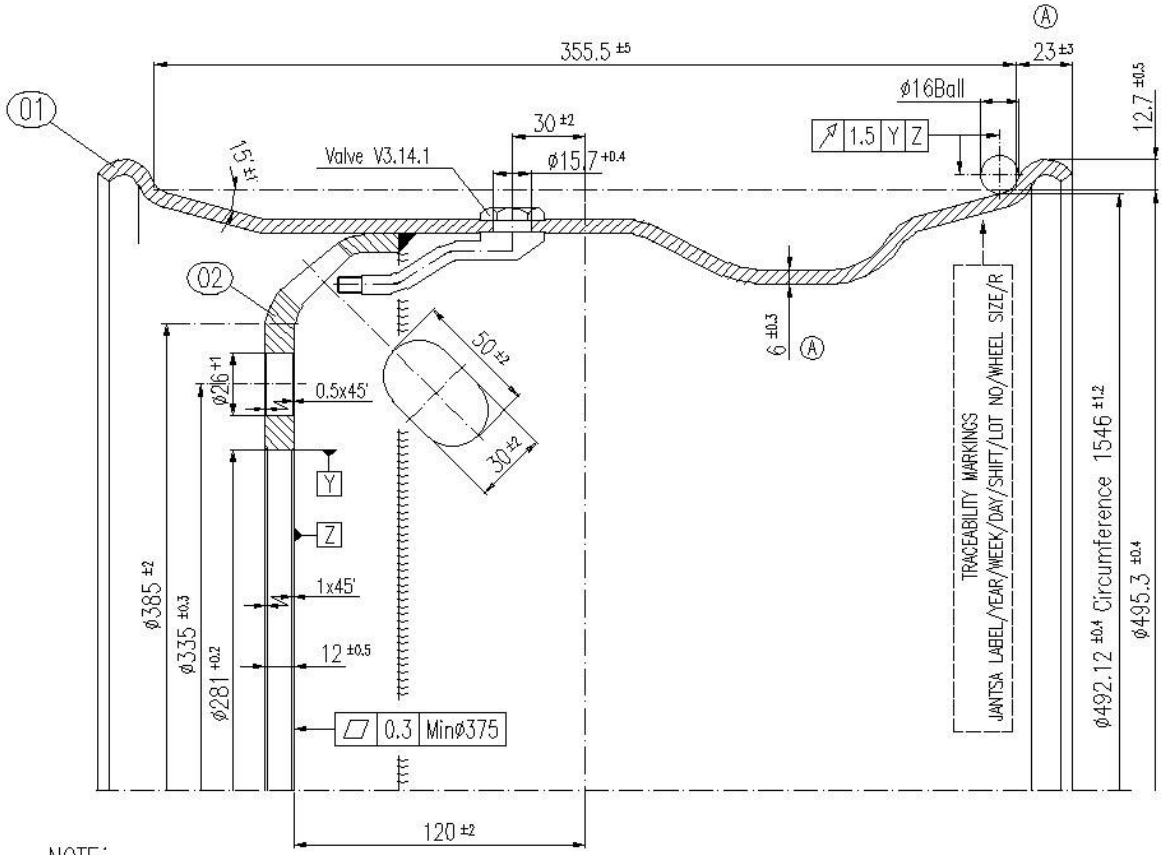

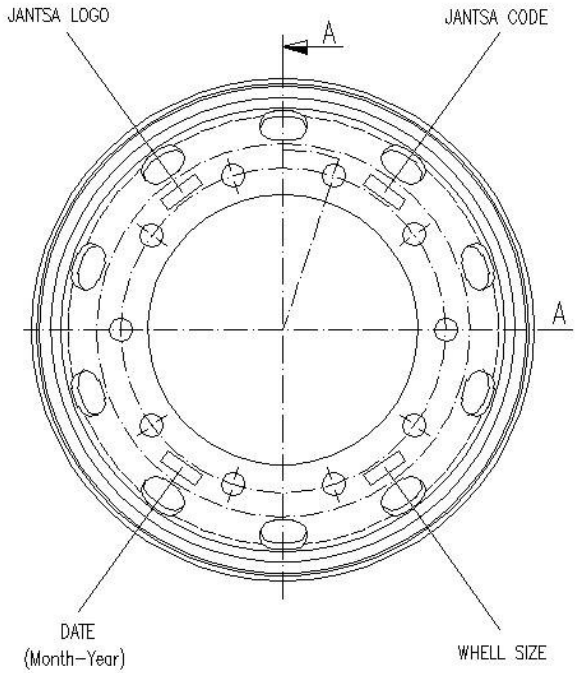

NOTE:

1-Bu jant E.T.R.T.O. ve TSE normlarinda beliritilen ozelliklere uygun olacaktir.
This rim has all specifications of

2-Musade edilen balnsizlik 2000 Cmg.
Statik balasizlik 100 gr.
The acceptable un balanceness is 2000 Cmg.
Static unbalanceness is 100 gr.

3-Yuk kapasitesi (100 Km/h.): 4500 Kg
Loading capacity (100 Km/h): 4500 Kg

4-Subap deligi alin kaynagi uzerine rastlamayacak.
Position of rim welding must not lap over the hole.

5-Lastik ebadi 445/65 R 19.5
Tyre size 445/65 R 19.5

6-Tavsiye edilen subap V3.1
Rec. valve type V3.14.1

7-Jant ve jant üzerindeki delikler keskin koselerden arindirilacaktir.
The sharp corners on the wheel an wheel holes shall be purified.

MON.NO	PCS	PART NAME	MATERIAL	PURT NUMBER	WEIGHT
02	1	DISC	ERD 3944 / St 44-2	-	-
01	1	RIM Ⓐ	ERD 3944 / St 44-2	060TB19514003-G157B	-

DISTRIBUTION	
Technical Department	1
Production Department	1
Quality Assurance Dept.	1
INVESTMENT NO	
PAGE NO	

FINISHING TOLERANCES : All surfaces marked with ∇ are to be machined unless otherwise indicated general machining tolerances:

1) ANGULAR TOLERANCE = ±0' 10'

2) DIMENSIONAL TOLERANCE (mm)

	Up to 6	6 to 30	30 to 100	100 to 300
Diameter	±0.05	±0.1	±0.15	±0.2
Length	±0.1	±0.2	±0.3	±0.5

DO NOT ADJUST THE DIMESION FROM THE DRAWING

	NAME	SIGNATURE	DATE
DRAWN BY	M.BAHAR		28.06.05
CHECKED	M.KARADELI		28.06.05
APPROVED	S.BILGENOGLU		28.06.05

SCALE: -

Item Name: 19.5x14.00

jantsa
Wheel Industry & Trade Inc.Co.
Phone : 0 256 259 11 25
Fax : 0 256 259 11 24
AYDIN / TURKEY

DRAWING NO: 142010